REV	MARK	HISTORY	DATE	NAME
REV.0	\	\	2016.03.23	ZH

Front view

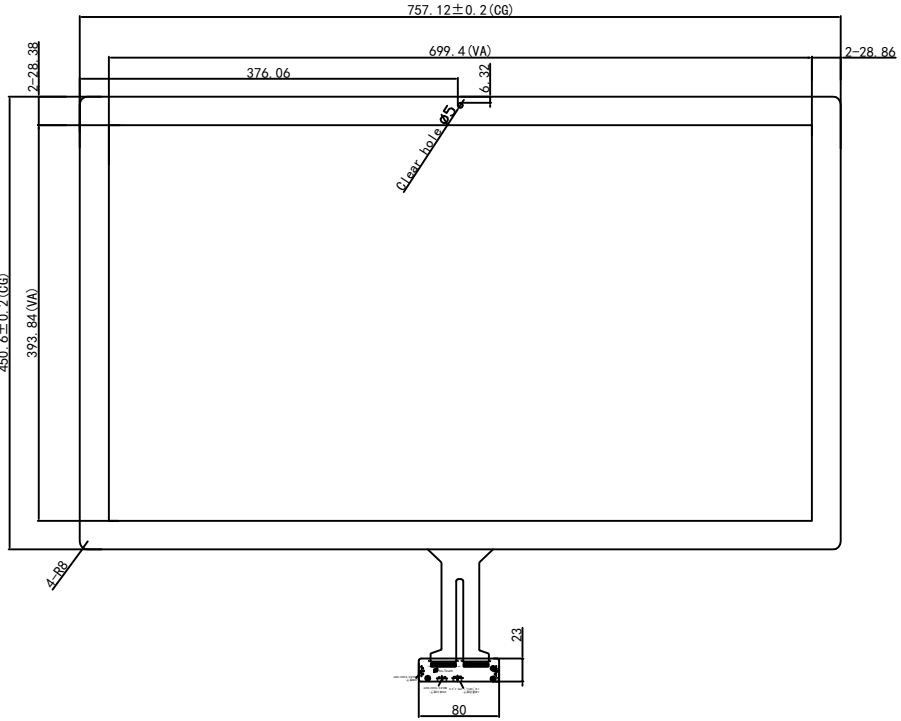

Side view



Back view

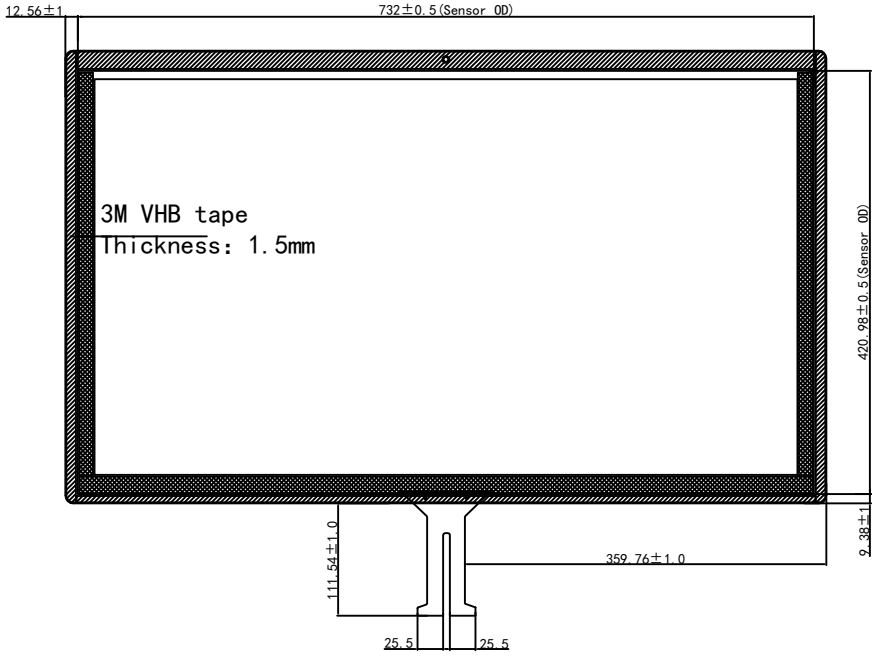

Technical Parameters:

1. TP Structure: G+G;
2. TP type: COB; IC: ILITek2510
   Operating voltage: USB:4.75V-5.25V
3. Transmission: ≥85%
4. Surface hardness: Above 6H
5. Operating temp: -10℃~+60℃, ≤85%RH
6. Storage temp: -20℃~+70℃, ≤85%RH
7. Unmarked tolerance±0.3mm
8. ROHS complied.

RXC-GG320760B-1.0				SHEET	UNIT	SCALE	1st ANGLE PROJECTION
				1 of 1	mm	1:1	
DESIGN		DATE		Reshine Display (HK) Technology Co., Limited			
CHECK	JSY	DATE	2019.11.28				

由 Autodesk 教育版产品制作